On the use of state constraints in optimal control of singular PDEs

Barbara Kaltenbacher, University of Klagenfurt

joint work with

Christian Clason, University of Graz

EUCCU, TU Chemnitz, July 2013

Outline

- motivation of control for singular/degenerate PDEs:
  - nonlinear acoustics
  - microelectromechanical systems (MEMS)
- a model problem: static MEMS
- control versus state constrained minimization
- numerical results
- optimality system
- back to nonlinear acoustics and transient MEMS

Some Singular/Degenerate PDEs

- isentropic Euler equations

$$\begin{cases} \varrho_t + m_x &= 0 \\ m_t + (\frac{m^2}{\rho} + \kappa\varrho^\gamma)_x &= 0 \end{cases}$$

ϱ... density
m... mass
$p = \kappa\varrho^\gamma$... pressure
$\gamma > 1$... adiabatic exponent

- Richards equation

$$\begin{cases} s_t = \nabla \cdot (\nabla u + \kappa(s)) \\ (s, u) \in \Phi \end{cases}$$

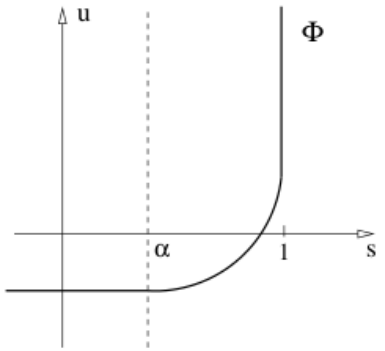

s... saturation
u... pressure

- nonlinear acoustics

$$(1 - ky)y_{tt} - c^2\Delta y - b\Delta y_t = k(y_t)^2$$

- transient MEMS (microelectromechanical system)

$$y_{tt} + cy_t + dy + \rho\Delta^2 y - \eta\Delta y + \frac{b(t)a(x)}{(1+y)^2} = 0$$

Nonlinear Acoustics

high intensity ultrasound:
cleaning, welding,
sonochemistry, litotripsy,
thermotherapy,. . .

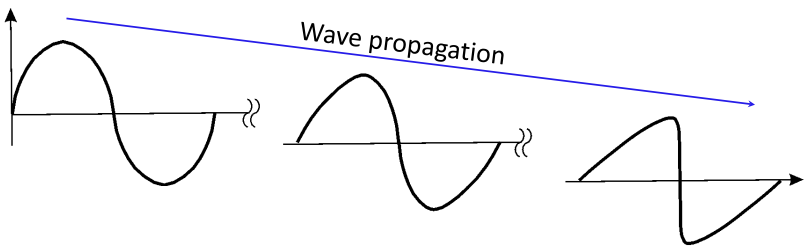

Westervelt equation:

$$(1 - ky)y_{tt} - c^2\Delta y - b\Delta y_t = k(y_t)^2$$

y. . . acoustic pressure
c. . . speed of sound
b. . . diffusivity of sound
k. . . parameter of nonlinearity

Nonlinear Acoustics

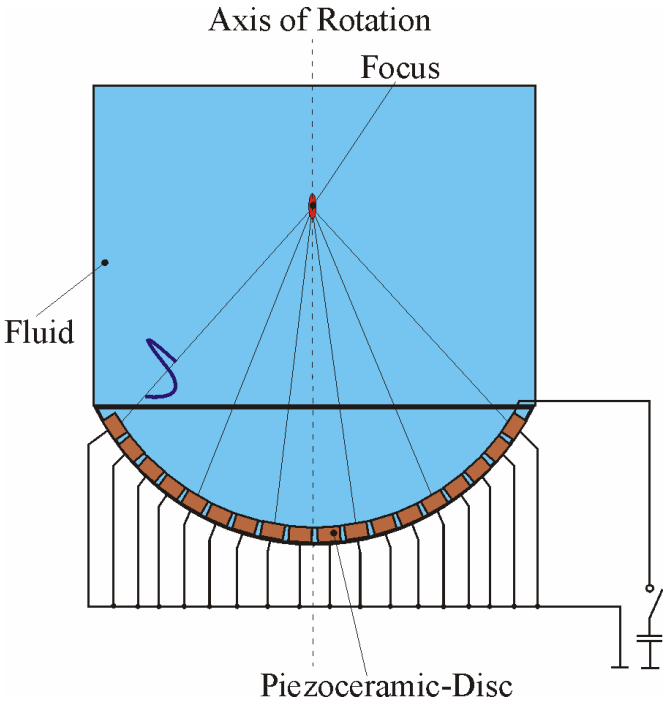

focusing by piezoarray
$\rightsquigarrow$ Neumann boundary control
to achieve desired
pressure distribution $y(x,t)$

$$(1-ky)y_{tt} - c^2\Delta y - b\Delta y_t + by_t = k(y_t)^2$$

achieve high pressure $|y|$
avoid degeneracy at $y = \frac{1}{k}$!

Nonlinear Acoustics

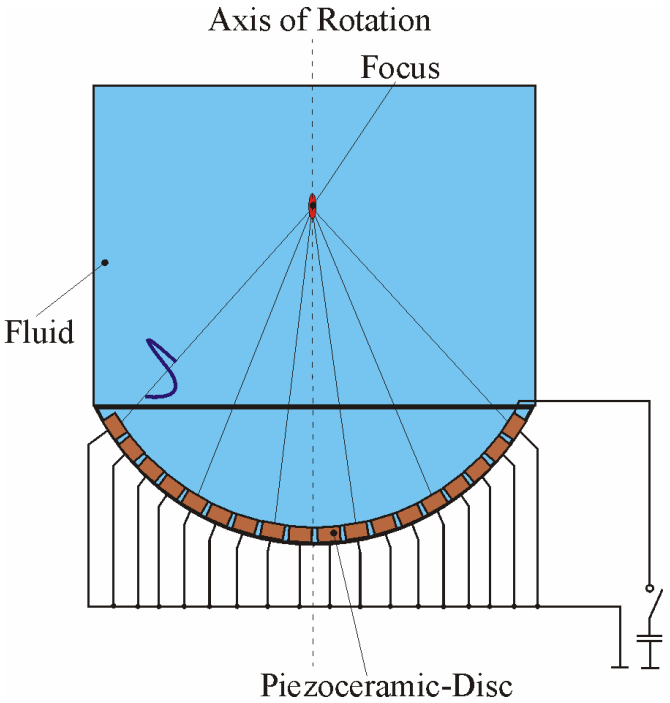

focusing by piezoarray
$\rightsquigarrow$ Neumann boundary control
to achieve desired
pressure distribution $y(x,t)$

$$(1-ky)y_{tt} - c^2\Delta y - b\Delta y_t + by_t = k(y_t)^2$$

achieve high pressure $|y|$
avoid degeneracy at $y = \frac{1}{k}$!

MicroElectroMechanical Systems (MEMS)

acceleration sensors,
microphones, pumps,
loudspeakers, ...

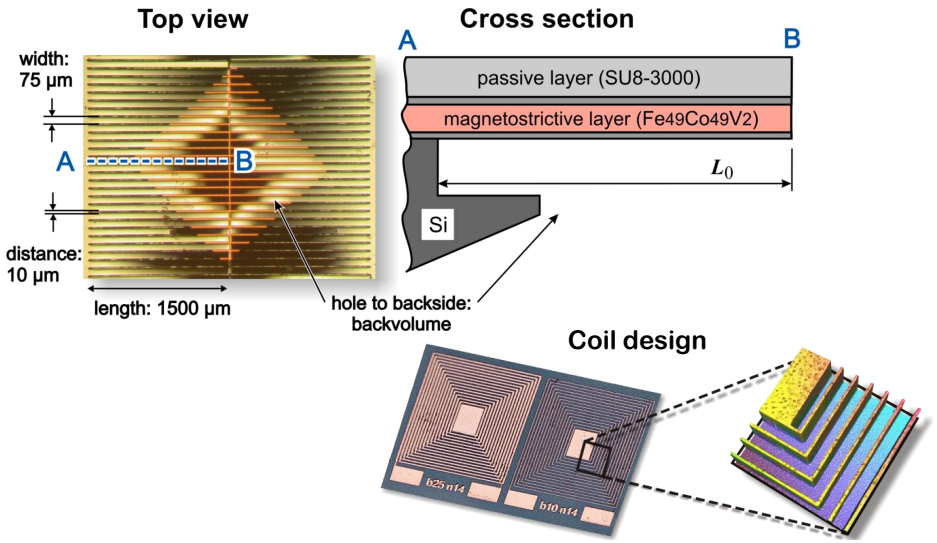

transient MEMS equation

$$y_{tt} + cy_t + dy + \rho\Delta^2 y - \eta\Delta y + \frac{b(t)a(x)}{(1+y)^2} = 0$$

y ... membrane/beam displacement
$b(t)$ ... voltage excitation
$a(x)$ ... dielectric properties

MicroElectroMechanical Systems (MEMS)

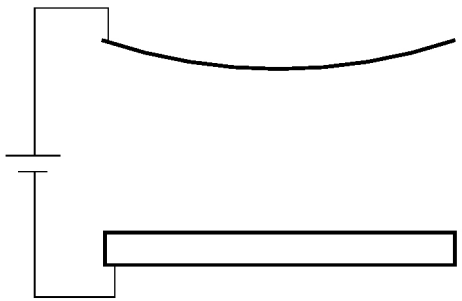

membrane
(boundary fixed)

ground plate
(fixed)

$\rightsquigarrow$ control of voltage $b(t)$ and/or design of dielectric properties $a(x)$ to achieve prescribed displacement $y(x,t)$;

$$y_{tt} + cy_t + dy + \rho\Delta^2 y - \eta\Delta y + \frac{b(t)a(x)}{(1+y)^2} = 0$$

achieve large displacements $|y|$
avoid pull-in instability at $y = -1$!

MicroElectroMechanical Systems (MEMS)

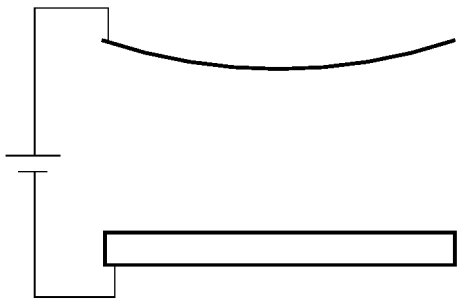

$\rightsquigarrow$ control of voltage $b(t)$ and/or design of dielectric properties $a(x)$ to achieve prescribed displacement $y(x,t)$;

$$y_{tt} + cy_t + dy + \rho\Delta^2 y - \eta\Delta y + \frac{b(t)a(x)}{(1+y)^2} = 0$$

achieve large displacements $|y|$
avoid pull-in instability at $y = -1$!

A model problem: static MEMS

$$-\Delta y = -\frac{u}{(1+y)^2}$$

y . . . membrane displacement

u . . . dielectric properties

tracking of desired displacement y_d:

$$\begin{cases} \min\limits_{y\in\mathcal{Y},\ u\in\mathcal{U}} & \frac{1}{2}\|y-y_d\|^2_{L^2(\Omega)} + \frac{\alpha}{2}\|u\|^2_{L^2(\Omega)} = J(u,y) \\ -\Delta y = -\frac{u}{(1+y)^2}, & y|_{\partial\Omega} = 0, \end{cases}$$

A model problem: static MEMS

$$-\Delta y = -\frac{u}{(1+y)^2}$$

y . . . membrane displacement

u . . . dielectric properties

tracking of desired displacement y_d:

$$\begin{cases} \min\limits_{y\in\mathcal{Y},\ u\in\mathcal{U}} & \frac{1}{2}\left\|y-y_d\right\|^2_{L^2(\Omega)} + \frac{\alpha}{2}\left\|u\right\|^2_{L^2(\Omega)} = J(u,y) \\ -\Delta y = -\frac{u}{(1+y)^2}, & y|_{\partial\Omega} = 0, \end{cases}$$

Standard Approach via Control-to-State Map

$$\min_{u \in \mathcal{U}_{ad}} \frac{1}{2} \|S(u) - y_d\|^2_{L^2(\Omega)} + \frac{\alpha}{2} \|u\|^2_{L^2(\Omega)}$$

S . . . control-to-state map:

$$\begin{array}{rccl} S: & \mathcal{U}_{ad} & \to & \mathcal{Y} \\ & u & \mapsto & y \text{ s.t. } -\Delta y = -\frac{u}{(1+y)^2}, \quad y|_{\partial\Omega} = 0, \end{array}$$

domain of S: $\mathcal{U}_{ad} = ?$

Standard Approach via Control-to-State Map

$$\min_{u \in \mathcal{U}_{ad}} \frac{1}{2} \|S(u) - y_d\|^2_{L^2(\Omega)} + \frac{\alpha}{2} \|u\|^2_{L^2(\Omega)}$$

S . . . control-to-state map:

$$\begin{array}{rccl} S: & \mathcal{U}_{ad} & \to & \mathcal{Y} \\ & u & \mapsto & y \text{ s.t. } -\Delta y = -\frac{u}{(1+y)^2}, \quad y|_{\partial\Omega} = 0, \end{array}$$

domain of S: $\mathcal{U}_{ad} = ?$

Control-to-State Map

$$-\Delta y = -\frac{u}{(1+y)^2}, \quad y|_{\partial\Omega} = 0$$

Theorem (Pelesko 2002)

There exists $M_u > 0$ such that for all $\|u\|_{L^2(\Omega)} > M_u$ no solution y exists.

Proposition

There exists a constant $M_u > 0$ sufficiently small such that the control-to-state mapping $S : \mathcal{U}_M \to \mathcal{Y}$ is well-defined.

$$\mathcal{U}_M := \left\{ u \in \mathcal{U} : \|u\|_{L^2(\Omega)} \leq M_u \right\}$$

$$\mathcal{Y} := H^2(\Omega) \cap H_0^1(\Omega) \hookrightarrow C_0(\Omega),$$

Control-to-State Map

$$-\Delta y = -\frac{u}{(1+y)^2}, \quad y|_{\partial\Omega} = 0$$

Theorem (Pelesko 2002)

There exists $M_u > 0$ such that for all $\|u\|_{L^2(\Omega)} > M_u$ no solution y exists.

Proposition

There exists a constant $M_u > 0$ sufficiently small such that the control-to-state mapping $S : \mathcal{U}_M \to \mathcal{Y}$ is well-defined.

$$\mathcal{U}_M := \left\{ u \in \mathcal{U} : \|u\|_{L^2(\Omega)} \leq M_u \right\}$$
$$\mathcal{Y} := H^2(\Omega) \cap H_0^1(\Omega) \hookrightarrow C_0(\Omega),$$

Proof: monotonicity argument does not work here!

Control-to-State Map

$$-\Delta y = -\frac{u}{(1+y)^2}, \quad y|_{\partial\Omega} = 0$$

Theorem (Pelesko 2002)

There exists $M_u > 0$ such that for all $\|u\|_{L^2(\Omega)} > M_u$ no solution y exists.

Proposition

There exists a constant $M_u > 0$ sufficiently small such that the control-to-state mapping $S : \mathcal{U}_M \to \mathcal{Y}$ is well-defined.

$$\mathcal{U}_M := \left\{ u \in \mathcal{U} : \|u\|_{L^2(\Omega)} \leq M_u \right\}$$
$$\mathcal{Y} := H^2(\Omega) \cap H_0^1(\Omega) \hookrightarrow C_0(\Omega),$$

Proof: monotonicity argument does not work here!

Idea of Proof

Fixed point operator $T : W \to W$, $v \mapsto Tv := y$, where y solves

$$\begin{cases} -\Delta y = -\dfrac{u}{(1+v)^2} & \text{on } \Omega\,, \\ \qquad y = 0 & \text{on } \partial\Omega, \end{cases}$$

where $W = \left\{ v \in \mathcal{Y} : \|v\|_{C(\Omega)} \leq M_y \right\}$ for some $M_y \in (0,1)$.

T self-mapping: For any $v \in W$, by $\left\|(-\Delta)^{-1} f\right\|_{C(\Omega)} \leq C_L \|f\|_{L^2(\Omega)}$

$$\|Tv\|_{C(\Omega)} \leq C_L \left\| \frac{u}{(1+v)^2} \right\|_{L^2(\Omega)} \leq \frac{C_L}{(1-M_y)^2} \|u\|_{L^2(\Omega)} \overset{!}{\leq} M_y\,,$$

Idea of Proof

Fixed point operator $T : W \to W$, $v \mapsto Tv := y$, where y solves

$$\begin{cases} -\Delta y = -\dfrac{u}{(1+v)^2} & \text{on } \Omega\,, \\ \qquad y = 0 & \text{on } \partial\Omega, \end{cases}$$

where $W = \left\{ v \in \mathcal{Y} : \|v\|_{C(\Omega)} \leq M_y \right\}$ for some $M_y \in (0,1)$.

T self-mapping: For any $v \in W$, by $\left\|(-\Delta)^{-1} f\right\|_{C(\Omega)} \leq C_L \|f\|_{L^2(\Omega)}$

$$\|Tv\|_{C(\Omega)} \leq C_L \left\| \frac{u}{(1+v)^2} \right\|_{L^2(\Omega)} \leq \frac{C_L}{(1-M_y)^2} \|u\|_{L^2(\Omega)} \overset{!}{\leq} M_y\,,$$

$$\rightsquigarrow \quad \|u\|_{L^2(\Omega)} \leq \frac{M_y(1-M_y)^2}{C_L} =: M_u = M_u(M_y)$$

Idea of Proof

Fixed point operator $T : W \to W$, $v \mapsto Tv := y$, where y solves

$$\begin{cases} -\Delta y = -\dfrac{u}{(1+v)^2} & \text{on } \Omega\,, \\ \quad y = 0 & \text{on } \partial\Omega, \end{cases}$$

where $W = \left\{ v \in \mathcal{Y} : \|v\|_{C(\Omega)} \leq M_y \right\}$ for some $M_y \in (0,1)$.

T self-mapping: For any $v \in W$, by $\left\|(-\Delta)^{-1} f\right\|_{C(\Omega)} \leq C_L \|f\|_{L^2(\Omega)}$

$$\|Tv\|_{C(\Omega)} \leq C_L \left\| \frac{u}{(1+v)^2} \right\|_{L^2(\Omega)} \leq \frac{C_L}{(1-M_y)^2} \|u\|_{L^2(\Omega)} \overset{!}{\leq} M_y\,,$$

$$\rightsquigarrow \quad \|u\|_{L^2(\Omega)} \leq \frac{M_y(1-M_y)^2}{C_L} =: M_u = M_u(M_y)$$

$$M_u(M_y) \leq M_u(\underbrace{M_{y,\max}}_{=1/3}) = \frac{4}{27 C_L} \approx 0.14815 \text{ in case } \Omega = (0,1)^2$$

Idea of Proof

Fixed point operator $T : W \to W$, $v \mapsto Tv := y$, where y solves

$$\begin{cases} -\Delta y = -\dfrac{u}{(1+v)^2} & \text{on } \Omega\,, \\ \quad y = 0 & \text{on } \partial\Omega, \end{cases}$$

where $W = \left\{ v \in \mathcal{Y} : \|v\|_{C(\Omega)} \leq M_y \right\}$ for some $M_y \in (0,1)$.

T self-mapping: For any $v \in W$, by $\left\|(-\Delta)^{-1} f\right\|_{C(\Omega)} \leq C_L \|f\|_{L^2(\Omega)}$

$$\|Tv\|_{C(\Omega)} \leq C_L \left\| \frac{u}{(1+v)^2} \right\|_{L^2(\Omega)} \leq \frac{C_L}{(1-M_y)^2} \|u\|_{L^2(\Omega)} \overset{!}{\leq} M_y\,,$$

$$\rightsquigarrow \quad \|u\|_{L^2(\Omega)} \leq \frac{M_y(1-M_y)^2}{C_L} =: M_u = M_u(M_y)$$

$$M_u(M_y) \leq M_u(\underbrace{M_{y,\max}}_{=1/3}) = \frac{4}{27 C_L} \approx 0.14815 \text{ in case } \Omega = (0,1)^2$$

Control constrained versus state constrained optimization

$$(\mathcal{P}_{cc}) \begin{cases} \min\limits_{y\in\mathcal{Y},u\in\mathcal{U}} J(u,y) \\ -\Delta y = -\dfrac{u}{(1+y)^2}, \\ \|u\|^2_{L^2(\Omega)} \le M_u^2, \end{cases}$$

with M_u sufficiently small.
$(\Rightarrow \quad \|y\|_{C(\Omega)} \le M_y < 1)$

$$(\mathcal{P}_{sc}) \begin{cases} \min\limits_{y\in\mathcal{Y},u\in\mathcal{U}} J(u,y) \\ -\Delta y = -\dfrac{u}{(1+y)^2}, \\ -y(x) \le M_y \quad \forall x \in \Omega, \end{cases}$$

for given $M_y < 1$.

admissible set for $(\mathcal{P}_{cc})$ $\subset$ admissible set for $(\mathcal{P}_{sc})$
$\Rightarrow$ worse tracking with control constrained approach

Numerical tests

$$J(u,y) = \frac{1}{2}\|y - y_d\|^2_{L^2(\Omega)} + \frac{\alpha}{2}\|u\|^2_{L^2(\Omega)}$$

$\Omega = (0,1)^2$, $\alpha = 10^{-6}$, 64×64 grid.
control constraints: $M_u = 0.14815$ (optimal)
state-constraints: $M_y = 0.99$

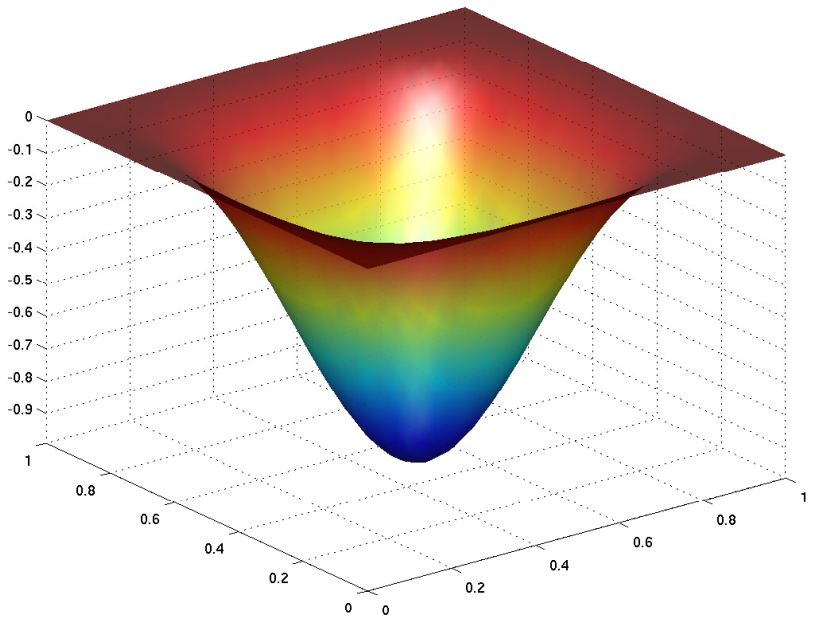

Target y_d

Numerical tests: control constraints

optimal control u_{cc}

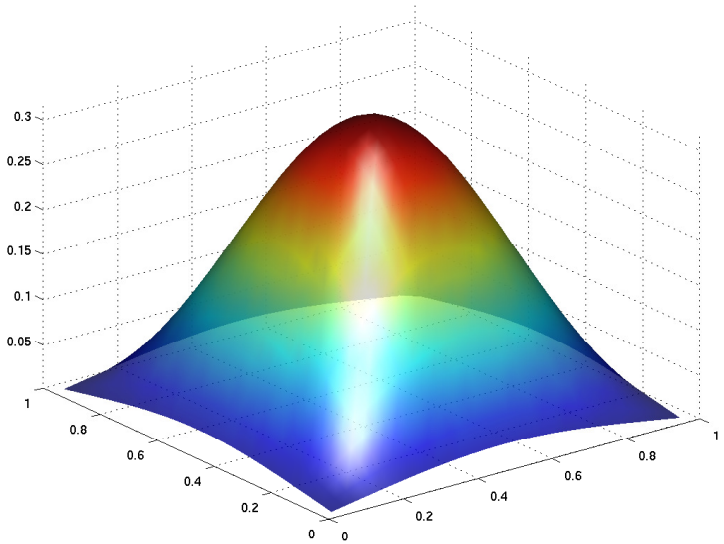

optimal state y_{cc}

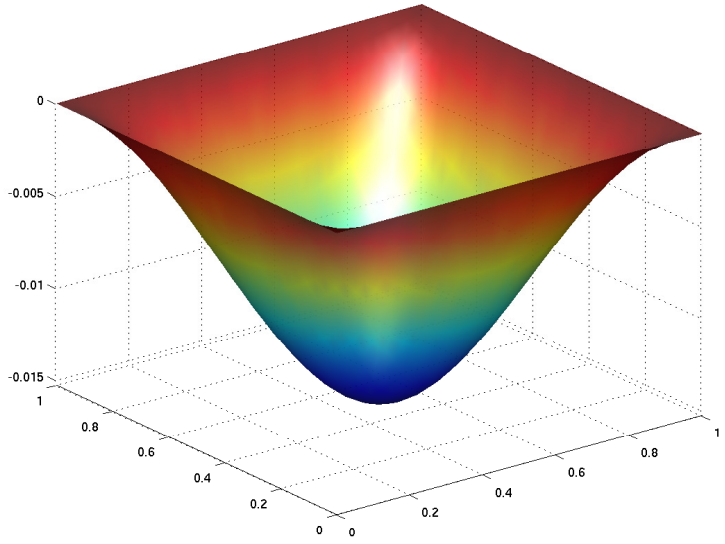

Numerical tests: state constraints

optimal control u_{sc}

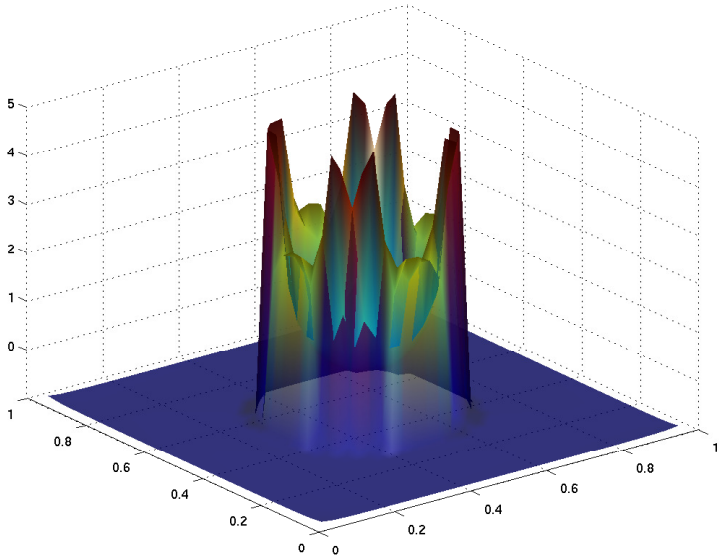

optimal state y_{sc}

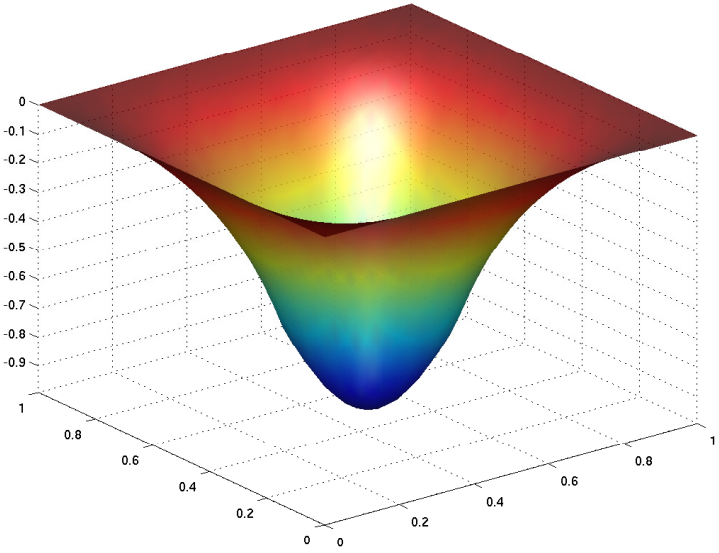

Comparison: control vs state constraints

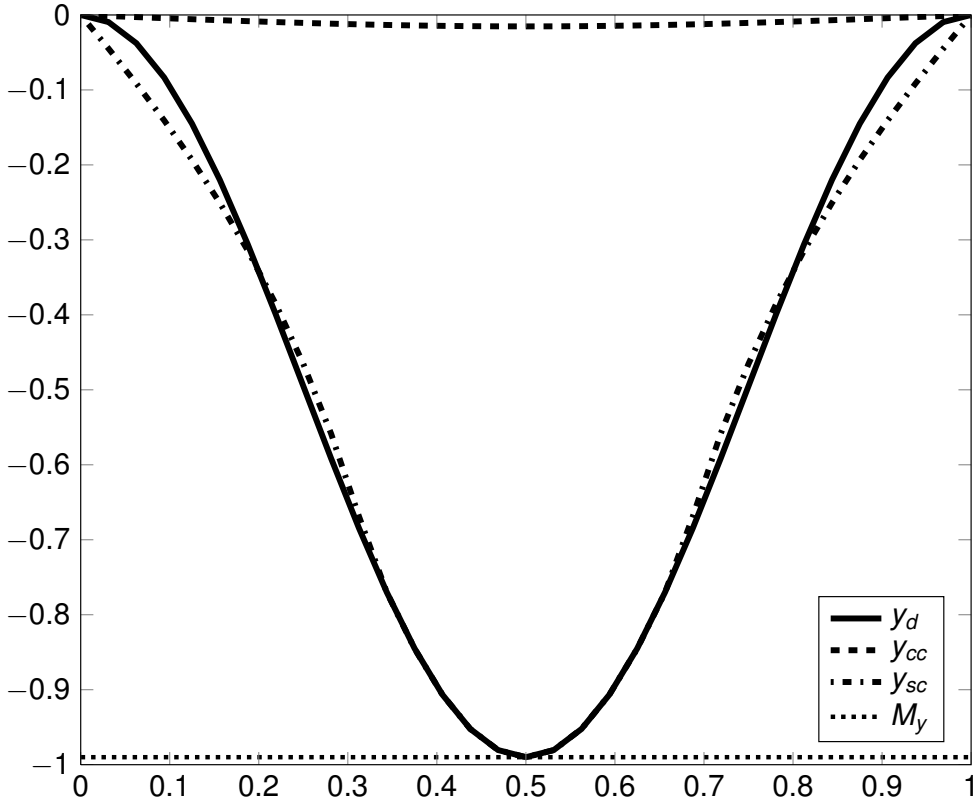

Cross sections of states for control-constrained (y_{cc}, dashed) and state-constrained (y_{sc}, dash-dotted) problems, as well as target y_d (solid) and bound M_y (dotted)

Control constrained version

$$(\mathcal{P}_{cc}) \begin{cases} \min\limits_{y\in\mathcal{Y},u\in\mathcal{U}} \dfrac{1}{2}\|y-y_d\|^2_{L^2(\Omega)} + \dfrac{\alpha}{2}\|u\|^2_{L^2(\Omega)} \\ -\Delta y = -\dfrac{u}{(1+y)^2}, \\ \|u\|^2_{L^2(\Omega)} \leq M_u^2, \end{cases}$$

where M_u has to be chosen sufficiently small.

Control constrained version: State equation

control space: $\mathcal{U} := L^2(\Omega)\,, \quad \mathcal{U}_M := \left\{ u \in \mathcal{U} : \|u\|_{L^2(\Omega)} \leq M_u \right\}$

state space: $\mathcal{Y} := H^2(\Omega) \cap H_0^1(\Omega) \hookrightarrow C_0(\Omega),$

Theorem

There exists a constant $M_u > 0$ sufficiently small such that the control-to-state mapping $S : \mathcal{U}_M \to \mathcal{Y}$ is well-defined, weakly continuous, and Fréchet differentiable.

$\rightsquigarrow$ reduced problem

$$(\mathcal{P}'_{cc}) \quad \min_{u \in \mathcal{U}_M} \frac{1}{2} \|S(u) - y_d\|^2_{L^2(\Omega)} + \frac{\alpha}{2} \|u\|^2_{L^2(\Omega)}\,.$$

Control constrained version: Optimality system

Theorem

There exists a minimizer $u^* \in \mathcal{U}_M$ of $(\mathcal{P}'_{cc})$.

Theorem

Let $u^* \in \mathcal{U}_M$ be a local minimizer of $(\mathcal{P}'_{cc})$, $y^* := S(u^*) \in \mathcal{Y}$. Then there exist $\lambda^* \in \mathbb{R}$, $\lambda^* \geq 0$ and $p^* \in H^2(\Omega) \cap H_0^1(\Omega)$ s.t.

$$(OS_{cc}) \quad \begin{cases} -\Delta p^* - \dfrac{2u^*}{(1+y^*)^3} p^* = -(y^* - y_d) \\ \alpha u^* - \dfrac{1}{(1+y^*)^2} p^* = 0\,, \\ \lambda^* (\|u^*\|^2_{L^2(\Omega)} - M_u^2) = 0\,. \end{cases}$$

Proof: use, e.g., Proposition 3.2 in [Bonnans&Shapiro'00]; surjectivity of linearized state eq.; Slater condition with $u = 0$

State constrained version

$$(\mathcal{P}_{sc}) \begin{cases} \min\limits_{y\in\mathcal{Y},u\in\mathcal{U}} \dfrac{1}{2}\|y-y_d\|^2_{L^2(\Omega)} + \dfrac{\alpha}{2}\|u\|^2_{L^2(\Omega)} \\ -\Delta y = -\dfrac{u}{(1+y)^2}, \\ -y(x) \le M_y \ \forall x \in \Omega, \end{cases}$$

for given $M_y < 1$.

State constrained version: State equation

control space: $\mathcal{U} := L^2(\Omega)$

state space: $\mathcal{Y} := H^2(\Omega) \cap H_0^1(\Omega)\,,$

$\mathcal{Y}_M := \{y \in \mathcal{Y} : -y(x) \leq M_y \forall x \in \Omega\}$

state equation $\Leftrightarrow$ $G(u,y) := -\Delta y + \dfrac{u}{(1+y)^2} = 0$

Lemma

$G : \mathcal{U} \times \mathcal{Y}_M \to L^2(\Omega)$ is continuously Fréchet-differentiable.

Theorem

There exists a minimizer $(u^*, y^*) \in \mathcal{U} \times \mathcal{Y}_M$ of $(\mathcal{P}_{sc})$.

State constrained version: State equation

control space: $\mathcal{U} := L^2(\Omega)$

state space: $\mathcal{Y} := H^2(\Omega) \cap H_0^1(\Omega)\,,$

$\mathcal{Y}_M := \{y \in \mathcal{Y} : -y(x) \leq M_y \forall x \in \Omega\}$

state equation $\Leftrightarrow$ $G(u,y) := -\Delta y + \dfrac{u}{(1+y)^2} = 0$

Lemma (regular point condition)

There exists $(u_0, y_0) \in \mathcal{U} \times \mathcal{Y}_M$ *such that* $(y^* + y_0) \in \operatorname{int} \mathcal{Y}_M$ *and*

$$G_y(u^*, y^*)y_0 + G_u(u^*, y^*)(u_0 - u^*) = 0, \quad \textit{i.e.,}$$

$$(SE_{lin}) \qquad -\Delta y_0 - \tfrac{2u^*}{(1+y^*)^3} y_0 + \tfrac{u_0 - u^*}{(1+y^*)^2} = 0$$

State constrained version: State equation

control space: $\mathcal{U} := L^2(\Omega)$

state space: $\mathcal{Y} := H^2(\Omega) \cap H_0^1(\Omega)\,,$

$\mathcal{Y}_M := \{y \in \mathcal{Y} : -y(x) \leq M_y \forall x \in \Omega\}$

state equation $\Leftrightarrow$ $G(u,y) := -\Delta y + \dfrac{u}{(1+y)^2} = 0$

Lemma (regular point condition)

There exists $(u_0, y_0) \in \mathcal{U} \times \mathcal{Y}_M$ *such that* $(y^* + y_0) \in \operatorname{int} \mathcal{Y}_M$ *and*

$$G_y(u^*, y^*)y_0 + G_u(u^*, y^*)(u_0 - u^*) = 0, \quad \textit{i.e.,}$$

$$(SE_{lin}) \qquad -\Delta y_0 - \tfrac{2u^*}{(1+y^*)^3} y_0 + \tfrac{u_0 - u^*}{(1+y^*)^2} = 0$$

Proof: choose $y_0 \in -y^* + \operatorname{int} \mathcal{Y}_M$; resolve (SE_{lin}) for u_0

State constrained version: State equation

$$\text{control space:} \quad \mathcal{U} := L^2(\Omega)$$

$$\text{state space:} \quad \mathcal{Y} := H^2(\Omega) \cap H_0^1(\Omega)\,,$$

$$\mathcal{Y}_M := \{y \in \mathcal{Y} : -y(x) \leq M_y \forall x \in \Omega\}$$

$$\text{state equation} \quad \Leftrightarrow \quad G(u,y) := -\Delta y + \frac{u}{(1+y)^2} = 0$$

Lemma (surjectivity of linearized state equation)

Let $\overline{u} \in \mathcal{U}$, $\overline{y} \in \mathcal{Y}_M$ and assume that

$$(\textit{EV-cond}) \begin{cases} 1 \textit{ is not an eigenvalue of the compact operator} \\ A : L^2(\Omega) \to L^2(\Omega) \;\; Az = (-\Delta + cI)^{-1} bz \\ a = \frac{2\overline{u}}{(1+\overline{y})^3}\,, \quad b = \max\{a, 0\}, \quad c = -a + b \end{cases}$$

Then $G_y(\overline{u}, \overline{y}) : \mathcal{Y} \to L^2(\Omega)$ is surjective.

State constrained version: Optimality system

Theorem

Let $(u^*, y^*) \in \mathcal{U} \times \mathcal{Y}_M$ be a local minimizer of $(\mathcal{P}_{sc})$ and let (EV-cond) hold.
Then there exist $\mu^* \in \mathcal{M}(\Omega)$ and $p^* \in \mathrm{W}_0^{1,q}(\Omega)$, $q \in [1, \frac{n}{n-1}]$ s.t.

$$(OS_{sc}) \quad \begin{cases} -\Delta p^* - \dfrac{2u^*}{(1+y^*)^3} p^* = -(y^* - y_d) - \mu^*, \\ \alpha u^* - \dfrac{1}{(1+y^*)^2} p^* = 0, \\ \langle \mu^*, y - y^* \rangle_{\mathcal{M},\mathrm{C}} \leq 0 \quad \text{for all } y \in \mathcal{Y}_M. \end{cases}$$

Proof: use Theorem 2.1 in [Alibert&Raymond'98]:
strict differentiability, surjectivity, regular point condition

Remark: Existence of $p^* \in L^2(\Omega)$ can be show without (EV-cond) using a Maurer-Zowe constraint qualification.

State constrained version: Optimality system

Theorem

Let $(u^*, y^*) \in \mathcal{U} \times \mathcal{Y}_M$ be a local minimizer of $(\mathcal{P}_{sc})$ and let (EV-cond) hold.
Then there exist $\mu^* \in \mathcal{M}(\Omega)$ and $p^* \in \mathrm{W}_0^{1,q}(\Omega)$, $q \in [1, \frac{n}{n-1}]$ s.t.

$$(OS_{sc}) \quad \begin{cases} -\Delta p^* - \dfrac{2u^*}{(1+y^*)^3} p^* = -(y^* - y_d) - \mu^*, \\ \alpha u^* - \dfrac{1}{(1+y^*)^2} p^* = 0, \\ \langle \mu^*, y - y^* \rangle_{\mathcal{M},\mathrm{C}} \leq 0 \quad \text{for all } y \in \mathcal{Y}_M. \end{cases}$$

Proof: use Theorem 2.1 in [Alibert&Raymond'98]:
strict differentiability, surjectivity, regular point condition

Remark: Existence of $p^* \in L^2(\Omega)$ can be show without (EV-cond) using a Maurer-Zowe constraint qualification.

Back to transient MEMS and Nonlinear Acoustics

Regular point condition seems hard or impossible to satisfy due to low dimensional control:

- transient MEMs:

$$y_{tt} + cy_t + dy + \rho\Delta^2 y - \eta\Delta y + \frac{b(t)a(x)}{(1+y)^2} = 0$$

  track $y = y(x,t)$, but $u = a(x)$ or $u = b(t)$ or $u = a(x)b(t)$

- nonlinear acoustics:

$$(1 - ky)y_{tt} - c^2\Delta y - b\Delta y_t = k(y_t)^2$$

  track $y = y(x,t)$, but $u = \partial_\nu y|_{\partial\Omega}$

$\rightsquigarrow$ relaxation [Bonnans&Casas'89]

Back to transient MEMS and Nonlinear Acoustics

Regular point condition seems hard or impossible to satisfy due to low dimensional control:

- transient MEMs:

$$y_{tt} + cy_t + dy + \rho\Delta^2 y - \eta\Delta y + \frac{b(t)a(x)}{(1+y)^2} = 0$$

  track $y = y(x,t)$, but $u = a(x)$ or $u = b(t)$ or $u = a(x)b(t)$

- nonlinear acoustics:

$$(1 - ky)y_{tt} - c^2\Delta y - b\Delta y_t = k(y_t)^2$$

  track $y = y(x,t)$, but $u = \partial_\nu y|_{\partial\Omega}$

$\rightsquigarrow$ relaxation [Bonnans&Casas'89] ; localization [Casas&Tröltzsch'02]

Back to transient MEMS and Nonlinear Acoustics

Regular point condition seems hard or impossible to satisfy due to low dimensional control:

- transient MEMs:

$$y_{tt} + cy_t + dy + \rho\Delta^2 y - \eta\Delta y + \frac{b(t)a(x)}{(1+y)^2} = 0$$

  track $y = y(x,t)$, but $u = a(x)$ or $u = b(t)$ or $u = a(x)b(t)$

- nonlinear acoustics:

$$(1 - ky)y_{tt} - c^2\Delta y - b\Delta y_t = k(y_t)^2$$

  track $y = y(x,t)$, but $u = \partial_\nu y|_{\partial\Omega}$

$\rightsquigarrow$ relaxation [Bonnans&Casas'89] ; localization [Casas&Tröltzsch'02]

State constrained version: Optimality system via relaxation

(return to model problem for simplicity of exposition)

$$(\mathcal{P}_{sc}) \begin{cases} \min\limits_{y\in\mathcal{Y},u\in\mathcal{U}} J(u,y) \\ -\Delta y = -\frac{u}{(1+y)^2} \\ -y(x) \le M_y \ \forall x \in \Omega, \end{cases} \quad \rightarrow \quad (\mathcal{P}_{sc,\varepsilon}) \begin{cases} \min\limits_{y\in\mathcal{Y},u\in\mathcal{U},w\in L^2(\Omega)} J_\varepsilon(u,y) \\ -\Delta y = w \\ -y(x) \le M_y \ \forall x \in \Omega, \end{cases}$$

$J_\varepsilon(u,y) =$

$$J(u,y) + \tfrac{1}{2\varepsilon} \left\| w + \tfrac{u}{(1+y)^2} \right\|^2_{L^2(\Omega)} + \tfrac{1}{2\delta} \|u-u^*\|^2_{L^2(\Omega)} + \tfrac{1}{2} \left\| w + \tfrac{u^*}{(1+y^*)^2} \right\|^2_{L^2(\Omega)}$$

for a fixed local minimizer $(u^*, y^*) \in \mathcal{U} \times \mathcal{Y}_M$ of $(\mathcal{P}_{sc})$.

$\rightsquigarrow$ easier to satisfy regular point condition and surjectivity for $(\mathcal{P}_{sc,\varepsilon})$!

State constrained version: Optimality system via relaxation

(return to model problem for simplicity of exposition)

$$(\mathcal{P}_{sc}) \begin{cases} \min\limits_{y\in\mathcal{Y},u\in\mathcal{U}} J(u,y) \\ -\Delta y = -\frac{u}{(1+y)^2} \\ -y(x) \le M_y \ \forall x \in \Omega, \end{cases} \quad \rightarrow \quad (\mathcal{P}_{sc,\varepsilon}) \begin{cases} \min\limits_{y\in\mathcal{Y},u\in\mathcal{U},w\in L^2(\Omega)} J_\varepsilon(u,y) \\ -\Delta y = w \\ -y(x) \le M_y \ \forall x \in \Omega, \end{cases}$$

$J_\varepsilon(u,y) =$

$$J(u,y) + \tfrac{1}{2\varepsilon}\left\| w + \tfrac{u}{(1+y)^2}\right\|^2_{L^2(\Omega)} + \tfrac{1}{2\delta}\|u-u^*\|^2_{L^2(\Omega)} + \tfrac{1}{2}\left\| w + \tfrac{u^*}{(1+y^*)^2}\right\|^2_{L^2(\Omega)}$$

for a fixed local minimizer $(u^*, y^*) \in \mathcal{U} \times \mathcal{Y}_M$ of $(\mathcal{P}_{sc})$.

$\rightsquigarrow$ easier to satisfy regular point condition and surjectivity for $(\mathcal{P}_{sc,\varepsilon})$!

$\rightsquigarrow$ establish optimality system for $(\mathcal{P}_{sc,\varepsilon})$ and take limits as $\varepsilon \to 0$ to obtain optimality system for $(\mathcal{P}_{sc})$

State constrained version: Optimality system via relaxation

(return to model problem for simplicity of exposition)

$$(\mathcal{P}_{sc}) \begin{cases} \min\limits_{y\in\mathcal{Y},u\in\mathcal{U}} J(u,y) \\ -\Delta y = -\frac{u}{(1+y)^2} \\ -y(x) \le M_y \ \forall x \in \Omega, \end{cases} \quad \rightarrow \quad (\mathcal{P}_{sc,\varepsilon}) \begin{cases} \min\limits_{y\in\mathcal{Y},u\in\mathcal{U},w\in L^2(\Omega)} J_\varepsilon(u,y) \\ -\Delta y = w \\ -y(x) \le M_y \ \forall x \in \Omega, \end{cases}$$

$J_\varepsilon(u,y) =$

$$J(u,y) + \tfrac{1}{2\varepsilon}\left\| w + \tfrac{u}{(1+y)^2}\right\|^2_{L^2(\Omega)} + \tfrac{1}{2\delta}\|u-u^*\|^2_{L^2(\Omega)} + \tfrac{1}{2}\left\| w + \tfrac{u^*}{(1+y^*)^2}\right\|^2_{L^2(\Omega)}$$

for a fixed local minimizer $(u^*, y^*) \in \mathcal{U} \times \mathcal{Y}_M$ of $(\mathcal{P}_{sc})$.

$\rightsquigarrow$ easier to satisfy regular point condition and surjectivity for $(\mathcal{P}_{sc,\varepsilon})$!

$\rightsquigarrow$ establish optimality system for $(\mathcal{P}_{sc,\varepsilon})$ and take limits as $\varepsilon \to 0$ to obtain optimality system for $(\mathcal{P}_{sc})$

State constrained version: Optimality system via relaxation II

Theorem

Let $(u^*, y^*) \in \mathcal{U} \times \mathcal{Y}_M$ be a local minimizer of $(\mathcal{P}_{sc})$.
Then there exist $\mu^* \in \mathcal{M}(\Omega)$ and $p^* \in \mathrm{W}_0^{1,q}(\Omega)$, $q \in [1, \frac{n}{n-1}]$ s.t.

$$(OS_{sc}) \quad \begin{cases} -\Delta p^* - \dfrac{2u^*}{(1+y^*)^3} p^* = -(y^* - y_d) - \mu^*, \\ \alpha u^* - \dfrac{1}{(1+y^*)^2} p^* = 0, \\ \langle \mu^*, y - y^* \rangle_{\mathcal{M},\mathrm{C}} \leq 0 \quad \text{for all } y \in \mathcal{Y}_M. \end{cases}$$

Idea of Proof

- linearity, surjectivity $\Rightarrow$ optimality system $(OS_{sc,\varepsilon})$ for $(\mathcal{P}_{sc,\varepsilon})$
- convergence of global minimizers $\{(u_\varepsilon^*, w_\varepsilon^*, y_\varepsilon^*)\}_{\varepsilon>0}$ for $(\mathcal{P}_{sc,\varepsilon})$:

$$u_\varepsilon^* \to u^* \text{ in } L^2(\Omega)\,, \quad w_\varepsilon^* \to \frac{u^*}{(1+y^*)^2} \text{ in } L^2(\Omega)\,, \quad y_\varepsilon^* \to y^* \text{ in } \mathcal{Y}\,,$$

as $\varepsilon \to 0$:

  - ε penalty $\frac{1}{2\varepsilon}\left\| w + \frac{u}{(1+y)^2}\right\|^2_{L^2(\Omega)}$ enforces convergence of right hand side.
  - δ penalty $\frac{1}{2\delta}\|u-u^*\|^2_{L^2(\Omega)}$ keeps $(u_\varepsilon^*, y_\varepsilon^*)$ close to (u^*, y^*).

Idea of Proof

- linearity, surjectivity $\Rightarrow$ optimality system $(OS_{sc,\varepsilon})$ for $(\mathcal{P}_{sc,\varepsilon})$
- convergence of global minimizers $\{(u_\varepsilon^*, w_\varepsilon^*, y_\varepsilon^*)\}_{\varepsilon>0}$ for $(\mathcal{P}_{sc,\varepsilon})$:

  $$u_\varepsilon^* \to u^* \text{ in } L^2(\Omega)\,, \quad w_\varepsilon^* \to \frac{u^*}{(1+y^*)^2} \text{ in } L^2(\Omega)\,, \quad y_\varepsilon^* \to y^* \text{ in } \mathcal{Y}\,,$$

  as $\varepsilon \to 0$:
  - ε penalty $\frac{1}{2\varepsilon} \left\| w + \frac{u}{(1+y)^2} \right\|^2_{L^2(\Omega)}$ enforces convergence of right hand side.
  - δ penalty $\frac{1}{2\delta} \|u - u^*\|^2_{L^2(\Omega)}$ keeps $(u_\varepsilon^*, y_\varepsilon^*)$ close to (u^*, y^*).
- take limit $\varepsilon \to 0$ in $(OS_{sc,\varepsilon})$

Idea of Proof

- linearity, surjectivity $\Rightarrow$ optimality system $(OS_{sc,\varepsilon})$ for $(\mathcal{P}_{sc,\varepsilon})$
- convergence of global minimizers $\{(u_\varepsilon^*, w_\varepsilon^*, y_\varepsilon^*)\}_{\varepsilon>0}$ for $(\mathcal{P}_{sc,\varepsilon})$:

  $$u_\varepsilon^* \to u^* \text{ in } L^2(\Omega)\,, \quad w_\varepsilon^* \to \frac{u^*}{(1+y^*)^2} \text{ in } L^2(\Omega)\,, \quad y_\varepsilon^* \to y^* \text{ in } \mathcal{Y}\,,$$

  as $\varepsilon \to 0$:
  - ε penalty $\frac{1}{2\varepsilon} \left\| w + \frac{u}{(1+y)^2} \right\|^2_{L^2(\Omega)}$ enforces convergence of right hand side.
  - δ penalty $\frac{1}{2\delta} \|u - u^*\|^2_{L^2(\Omega)}$ keeps $(u_\varepsilon^*, y_\varepsilon^*)$ close to (u^*, y^*).
- take limit $\varepsilon \to 0$ in $(OS_{sc,\varepsilon})$

Transient MEMS

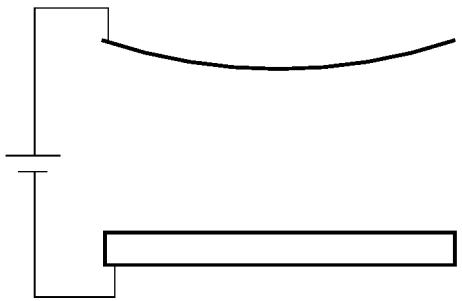

$\rightsquigarrow$ control of voltage $b(t)$ and/or design of dielectric properties $a(x)$ to achieve prescribed displacement $y(x,t)$;

$$y_{tt} + cy_t + dy + \rho\Delta^2 y - \eta\Delta y + \frac{b(t)a(x)}{(1+y)^2} = 0$$

achieve large displacements $|y|$
avoid pull-in instability at $y = -1$!

Transient MEMS

$$(\mathcal{P}_{sc}) \quad \begin{cases} \min\limits_{y\in\mathcal{Y},u\in\mathcal{U}} \quad \frac{1}{2}\|y-y_d\|^2_{L^2(0,T;L^2(\Omega))} + \frac{\alpha}{2}\|u\|^2_{\mathcal{U}} = J(u,y) \\ y_{tt} + cy_t + dy + \rho\Delta^2 y - \eta\Delta y + \dfrac{b(t)a(x)}{(1+y)^2} = 0 \text{ in } Q \\ y = \partial_\nu y = 0 \text{ on } (0,T)\times\partial\Omega\,, \quad y = y_t = 0 \text{ in } \{0\}\times\Omega \\ -y(t,x) \le M_y \quad \text{for all } t,x \in Q, \end{cases}$$

for given $M_y < 1$.

three cases:

(a) $b \in \mathcal{M}(0,T)$ fixed, $u = a \in \mathcal{U} = L^2(\Omega)$
(b) $a \in L^2(\Omega)$ fixed, $u = b \in \mathcal{U} = L^2(0,T)$
(c) $u = ab \in \mathcal{U} = \left\{ v\cdot(1+\varphi) : v \in L^2(\Omega)\,,\ \varphi \in L^2(0,T)\,,\ \int_0^T \varphi\, dt = 0 \right\}$

Transient MEMS: Existence of minimizer

$$(\mathcal{P}_{sc}) \begin{cases} \min\limits_{y\in\mathcal{Y},u\in\mathcal{U}} J(u,y) \\ y_{tt} + cy_t + dy + \rho\Delta^2 y - \eta\Delta y + \dfrac{b(t)a(x)}{(1+y)^2} = 0 \text{ in } Q \\ y = \partial_\nu y = 0 \text{ on } (0,T)\times\partial\Omega\,, \quad y = y_t = 0 \text{ in } \{0\}\times\Omega \\ -y(t,x) \le M_y \quad \text{for all } t,x \in Q, \end{cases}$$

$\mathcal{U} = L^2(Z)$ with $Z = \Omega$ in case $u = a$ and $Z = (0,T)$ in case $u = b$

$\mathcal{Y} = \{y \in \tilde{\mathcal{Y}} \,:\, y(0) = y_t(0) = 0\}$ where

$\tilde{\mathcal{Y}} := C(0,T;H^2(\Omega)) \cap C^1(0,T;L^2(\Omega)) \cap H^2(0,T;H^{-2}(\Omega))$

$\hookrightarrow C(0,T;C(\Omega))$

$\mathcal{Y}_M = \{y \in \mathcal{Y} : -y(x) \le M_y \text{ for all } x \in \Omega\}$

Theorem

There exists a minimizer $(u^*, y^*) \in \mathcal{U}\times\mathcal{Y}_M$ of $(\mathcal{P}_{sc})$

Transient MEMS: Optimality system

Theorem

Let $(u^*, y^*) \in \mathcal{U} \times \mathcal{Y}_M$ be a local minimizer of $(\mathcal{P}_{sc})$.
Then there exist $\mu^* \in \mathcal{M}(0,T;\mathcal{M}(\Omega))$ and
$p^* \in \mathcal{P} = C(0,T;L^2(\Omega)) \cap C^1(0,T;H^{-2}(\Omega))$ satisfying

$$\begin{cases} p^*_{tt} - cp^*_t + dp^* + \rho\Delta^2 p^* - \eta\Delta p^* + \dfrac{2u^*}{(1+y^*)^3}p^* = -\gamma(y^* - y_d) - \mu^* \\ \gamma\alpha u^* = Proj\left[\dfrac{p^*}{(1+y^*)^2}\right] \\ \langle \mu^*, y - y^* \rangle_{\mathcal{M},C} \leq 0 \quad \text{for all } y \in \mathcal{Y}_M. \end{cases}$$

where Proj$= \int_0^T \cdot dt$ in case $u = a(x)$, Proj$= \int_\Omega \cdot dx$ in case $u = b(t)$
and $\gamma \in \{0,1\}$, $\gamma + \|p^*\|_{\mathcal{P}} > 0$.

Proof: relaxation; localization; regularity of p: duality argument

Remark: Similarly for case $u = a(x)b(t)$

Transient MEMS: Optimality system

Theorem

Let $(u^*, y^*) \in \mathcal{U} \times \mathcal{Y}_M$ *be a local minimizer of* $(\mathcal{P}_{sc})$.
Then there exist $\mu^* \in \mathcal{M}(0,T;\mathcal{M}(\Omega))$ *and*
$p^* \in \mathcal{P} = C(0,T;L^2(\Omega)) \cap C^1(0,T;H^{-2}(\Omega))$ *satisfying*

$$
\begin{cases}
p^*_{tt} - cp^*_t + dp^* + \rho\Delta^2 p^* - \eta\Delta p^* + \dfrac{2u^*}{(1+y^*)^3}p^* = -\gamma(y^* - y_d) - \mu^* \\
\gamma\alpha u^* = Proj\left[\dfrac{p^*}{(1+y^*)^2}\right] \\
\langle \mu^*, y - y^* \rangle_{\mathcal{M},C} \leq 0 \quad \text{for all } y \in \mathcal{Y}_M.
\end{cases}
$$

where $Proj = \int_0^T \cdot dt$ *in case* $u = a(x)$, $Proj = \int_\Omega \cdot dx$ *in case* $u = b(t)$
and $\gamma \in \{0,1\}$, $\gamma + \|p^*\|_{\mathcal{P}} > 0$.

Proof: relaxation; localization; regularity of p: duality argument

Remark: Similarly for case $u = a(x)b(t)$

Nonlinear Acoustics

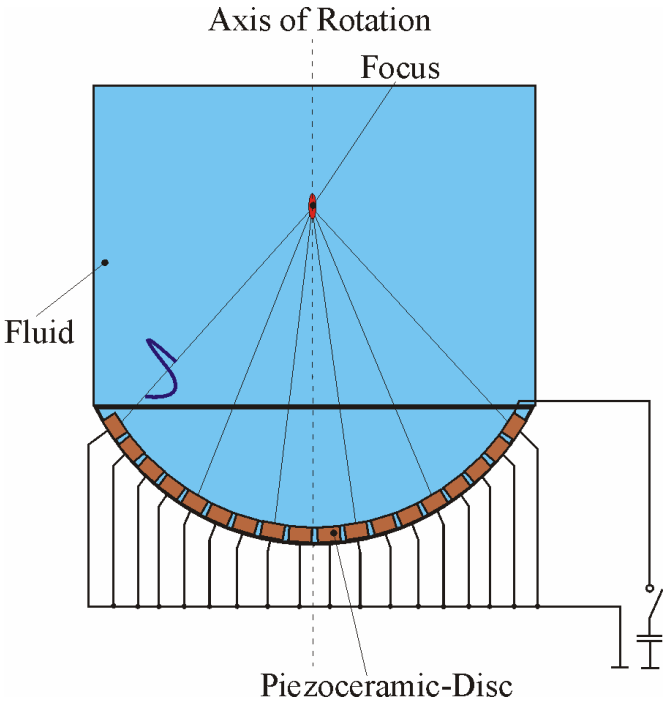

focusing by piezoarray
$\rightsquigarrow$ Neumann boundary control
to achieve desired
pressure distribution $y(x,t)$

$$(1-ky)y_{tt} - c^2\Delta y - b\Delta y_t + by_t = k(y_t)^2$$

achieve high pressure $|y|$
avoid degeneracy at $y = \frac{1}{k}$!

Nonlinear Acoustics

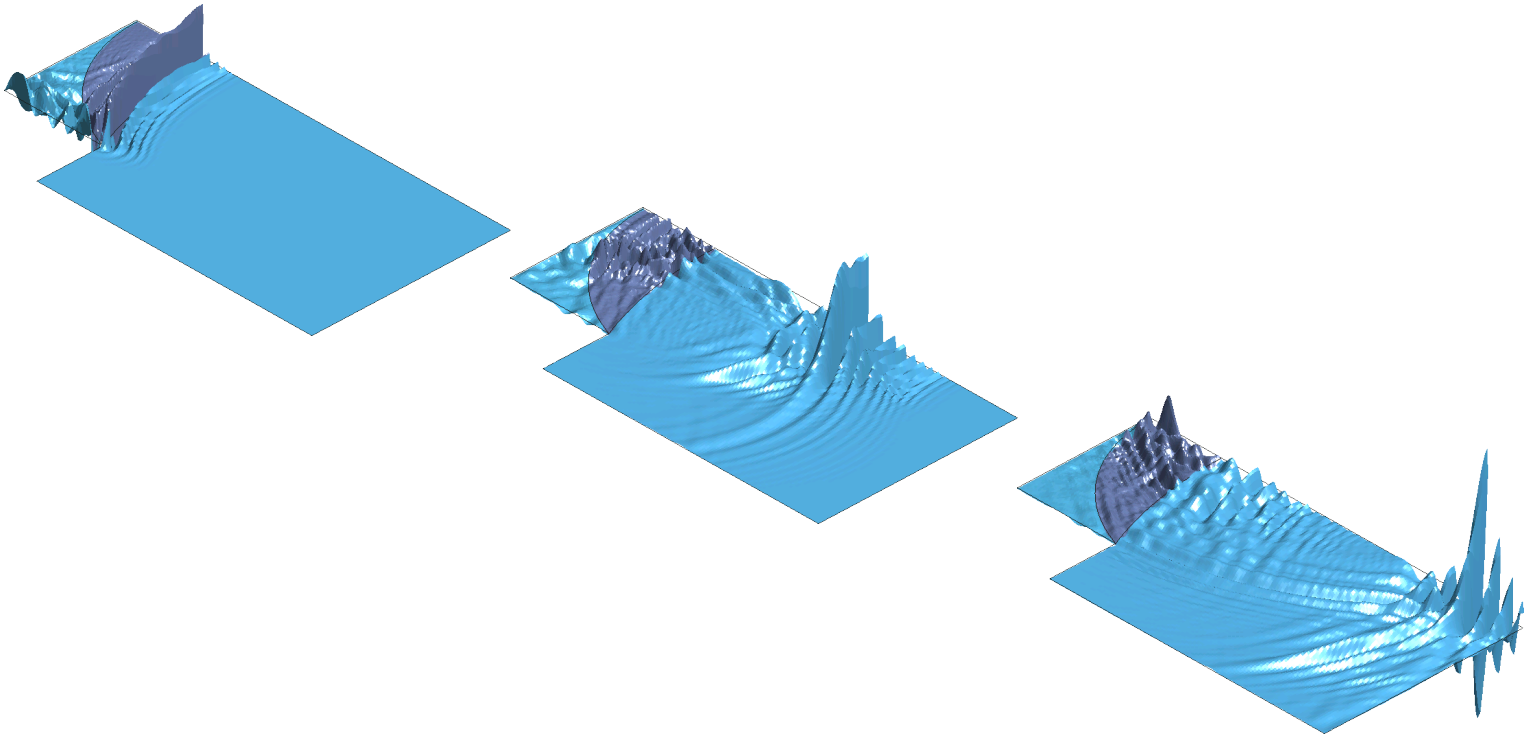

Nonlinear acoustics

$$
(\mathcal{P}_{sc})\quad
\begin{cases}
\min\limits_{y\in\mathcal{Y},u\in\mathcal{U}} \quad \dfrac{1}{2}\|y-y_d\|^2_{L^2(0,T;L^2(\Omega))}+\dfrac{\alpha}{2}\|u\|^2_{L^2(0,T;L^2(\Gamma))}=J(u,y)\\
(1-ky)y_{tt}-c^2\Delta y-b\Delta y_t+by_t-k(y_t)^2=0 \text{ in } Q,\\
y_t+c\partial_\nu y=0 \text{ on } (0,T)\times\Gamma \quad \text{(absorbing boundary conditions)}\\
\partial_\nu y=u \text{ on } (0,T)\times\hat{\Gamma} \quad \text{(excitation via piezoarray)}\\
y=y_t=0 \text{ in } \{0\}\times\Omega\\
-\underline{M}_y\le y(t,x)\le \overline{M}_y \quad \text{for all } t,x\in Q\\
\|y_t\|_{L^Q(0,T;L^P(\Omega))}\le m_y
\end{cases}
$$

for given $0<\underline{M}_y$, $0<\overline{M}_y<\frac{1}{k}$, and $m_y>0$, $\frac{1}{2P}+\frac{1}{3Q}=\frac{1}{3}$

Nonlinear acoustics

$$
(\mathcal{P}_{sc})\quad
\begin{cases}
\min\limits_{y\in\mathcal{Y},u\in\mathcal{U}} \quad \dfrac{1}{2}\|y-y_d\|^2_{L^2(0,T;L^2(\Omega))}+\dfrac{\alpha}{2}\|u\|^2_{L^2(0,T;L^2(\Gamma))}=J(u,y)\\
(1-ky)y_{tt}-c^2\Delta y-b\Delta y_t+by_t-k(y_t)^2=0 \text{ in } Q,\\
y_t+c\partial_\nu y=0 \text{ on } (0,T)\times\Gamma \quad \text{(absorbing boundary conditions)}\\
\partial_\nu y=u \text{ on } (0,T)\times\hat{\Gamma} \quad \text{(excitation via piezoarray)}\\
y=y_t=0 \text{ in } \{0\}\times\Omega\\
-\underline{M}_y\le y(t,x)\le \overline{M}_y \quad \text{for all } t,x\in Q\\
\|y_t\|_{L^Q(0,T;L^P(\Omega))}\le m_y
\end{cases}
$$

for given $0<\underline{M}_y$, $0<\overline{M}_y<\frac{1}{k}$, and $m_y>0$, $\frac{1}{2P}+\frac{1}{3Q}=\frac{1}{3}$

Nonlinear acoustics: Function spaces

$$\begin{cases} (1-ky)y_{tt} - c^2\Delta y - b\Delta y_t + by_t - k(y_t)^2 = 0 \text{ in } Q, \\ \partial_\nu y = u \text{ on } (0,T)\times\hat{\Gamma} \end{cases}$$

$$\mathcal{U} = \{u \in H^2(0,T;H^{-1/2}(\Gamma)) \,:\, u(0)=0\}$$

$$\mathcal{Y} = \{y \in \tilde{\mathcal{Y}} \,:\, y(0)=y_t(0)=0\} \text{ where}$$

$$\tilde{\mathcal{Y}} = C(0,T;H^2(\Omega)) \cap C^1(0,T;H^1(\Omega)) \cap H^1(0,T;H^2(\Omega)) \cap C^2(0,T;L^2(\Omega))$$
$$\hookrightarrow C(0,T;C(\Omega))$$

$$\mathcal{Y}_M = \left\{ y \in \mathcal{Y} : -\underline{M}_y \le y(t,x) \le \overline{M}_y \ \forall t,x \in Q,\ \|y_t\|_{L^Q(0,T;L^P(\Omega))} \le m_y \right\}$$

Remark: So far, well-posedness only with $\|y\|_{\mathcal{Y}}$ sufficiently small.
Now: Only finiteness of $\|y\|_{\mathcal{Y}}$ needed $\rightsquigarrow$ large gradients possible!

Nonlinear acoustics: Existence of minimizer, optimality system

Theorem

There exists a minimizer $(u^*, y^*) \in \mathcal{U} \times \mathcal{Y}_M$ *of* $(\mathcal{P}_{sc})$

Theorem

Let $(u^*, y^*) \in \mathcal{U} \times \mathcal{Y}_M$ *be a local minimizer of* $(\mathcal{P}_{sc})$.
Then there exist $\underline{\mu}^*, \overline{\mu}^* \in \mathcal{M}(0,T;\mathcal{M}(\Omega))$, $\lambda^* \geq 0$,
$p^* \in \mathcal{P} = C^\sigma(0,\overline{T};L^2(\Omega)) \cap H^\sigma(0,T;H^\theta(\Omega))$
$+L^\infty(0,T;L^2(\Omega)) \cap L^2(0,T;H^{\frac{1}{3}}(\Omega))$,
$0 < \sigma < \frac{3}{\sqrt{8}} - 1$, $0 < \theta < \frac{1}{\sqrt{8}}$ *satisfying* (1)
where $\gamma \in \{0,1\}$, $\gamma + \|p^*\|_{\mathcal{P}} + \lambda^* > 0$.

Proof: relaxation [Bonnans&Casas'89]; localization [Casas&Tröltzsch'02]; regularity of p: duality argument, interpolation

$$
\left.
\begin{aligned}
&\int_0^T \Big\{ \int_\Omega \Big(((1-ky^*)v)_{tt} p^* + c^2 \nabla v \nabla p^* + b \nabla v_t \nabla p^* + b v_t p^* \Big)\, dx \\
&\qquad\qquad + \int_{\hat{\Gamma}} (c v_t + \frac{b}{c} v_{tt}) p^*\, d\Gamma \Big\}\, dt \\
&\quad = -\gamma \int_0^T \int_\Omega (y^* - y_d) v\, dx\, dt - \left\langle \underline{\mu}^* + \overline{\mu}^*, kv \right\rangle_{\mathcal{M},\mathrm{C}} \\
&\qquad\qquad - \lambda^* Q \int_0^T \|y_t^*(t)\|_{L^P(\Omega)}^{Q-P} \int_\Omega |y_t^*|^{P-1} \mathrm{sign}(y_t^*) v_t\, dx\, dt \\
&\qquad\qquad\qquad\qquad \text{for all } v \in \mathcal{Y}, \\
&\int_0^T \int_\Gamma \Big(\gamma \alpha u^* v - (c^2 v + b v_t) p^* \Big)\, d\Gamma\, dt = 0 \quad \text{for all } v \in \mathcal{U}, \\
&\left\langle \underline{\mu}^*, y - y^* \right\rangle_{\mathcal{M},\mathrm{C}} \geq 0\,, \quad \left\langle \overline{\mu}^*, y - y^* \right\rangle_{\mathcal{M},\mathrm{C}} \leq 0 \quad \text{for all } y \in \mathcal{Y}_M, \\
&\qquad\qquad \lambda^* (\|y_t^*\|_{L^Q(0,T;L^P(\Omega))}^Q - m_y^Q) = 0
\end{aligned}
\right\} \quad (1)
$$

Conclusions and Remarks

- avoid singularity/degeneracy in nonlinear PDEs by imposing state constraints
- no control-to-state map
- general concept, individual challenges for particular PDEs
  - existence of minimizers
  - first order optimality conditions
  - regularity of adjoint state

$\rightarrow$ second order conditions

$\rightarrow$ other PDEs

J.-J. Alibert and J.-P. Raymond,
A Lagrange multiplier theorem for control problems with state constraints, Numer. Funct. Anal. Optim., **19** (1998), 697–704.

J. F. Bonnans and E. Casas,
Optimal control of semilinear multistate systems with state constraints, SIAM J. Contr. Opt., **27** (1989), 446–455.

E. Casas and F. Tröltzsch,
Error estimates for the finite-element approximation of a semilinear elliptic control problem, Control and Cybernetics, **31** (2002), 695–712.

C. Clason and B. Kaltenbacher,
On the use of state constraints in optimal control of singular PDEs, Systems & Control Letters, **62** (2013), 48–54.

C. Clason and B. Kaltenbacher,
Optimal control of a singular PDE modeling transient MEMS with control or state constraints, submitted.

C. Clason and B. Kaltenbacher,
Avoiding degeneracy in the Westervelt equation by state constrained optimal control, Evolution Equations and Control Theory **2** (2013), 281–300.

Thank you for your attention!